NAVAL POSTGRADUATE SCHOOL

MONTEREY, CALIFORNIA

IS4182 Student Final Project
Prof. Rick Hayes-Roth

Proposed Architecture for a Helicopter Information Awareness Module (*I-AM*)

by

Maj Carl Oros

19 March 2004

TABLE OF CONTENTS

I. DEFINING THE ARCHITECTURE CONTEXT AND ISSUES

A. PROBLEM CHARACTERIZATION

Today's Joint battle space can be characterized as a community of systems (sensors, platforms) and actors (Joint & Coalition) that are equipped with primarily *stove piped* systems that at best function merely to enable connectivity and interoperability. By design, these systems disseminate & exchange information & knowledge among select nodes and stakeholders. In order for the Joint force to truly become Network Centric, all future sensors, platforms, actors (decision makers and shooters) must be effectively networked in order to achieve a shared awareness, increased speed of command, higher tempo of operations, greater lethality, increased survivability, and a degree of self synchronization.[1]

Presently, the JFACC's Theater Battle Management Core System (TBMCS) incorporates much of Network Centric Warfare's (NCW) intent in its design. However, in practice the preponderance of this information lies solely within select headquarters work stations and neither reaches nor exchanges information with all battle space end users in real time.[2] For example, no USMC helicopters are equipped to receive or transmit any type of data link or

[1] Network Centric Warfare: Developing & Leveraging Information Superiority, David Alberts, John Garstka, Frederick Stein. CCRP Publications series, February 2000. p. 2.

[2] Theater Battle Management Core Systems (TBMCS) is the Combat Air Force (CAF) information and decision system supporting combined and joint air operations for the Joint Forces Commander (JFC). It integrates the Contingency Theater Automated Planning System (CTAPS - the force level planning system), Wing Command and Control System (WCCS - the wing level execution system), and Combat Intelligence System (CIS - the intelligence system) under a common core of services. TBMCS functionality includes intelligence processing; air campaign planning, execution and monitoring; aircraft scheduling; unit-level maintenance operations; unit- and force-level logistics planning; and weather monitoring and analysis. At the force level, TBMCS supports the JFC through the Air Operations Center (AOC) and Air Support Operations Center (ASOC). At the unit level, TBMCS supports the Wing Commander through the Wing Operations Center (WOC), Maintenance Operations Center (MOC), and Squadron Operations Center (SOC). DISA: Global Command & Control System TBMCS. http://jitc.fhu.disa.mil/gccsiop/interfaces/tbmcs.htm

common operational picture (COP). In fact, none are equipped with a digital map display. GPS data is displayed in text format on the console's programming screen or as a simple heading pointer overlay on the cockpit's Forward Looking Infrared (FLIR) display. Combat mission planning consists of manually entering route & threat information into the Navy Portable Flight Planning Software (N-PFPS). N-PFPS can be used with all DOD type/model/series aircraft. This application stores & displays geodetic charts and imagery of various scales, known route hazards, navigational aids, airports, and accepts wind data to calculate air speeds, flight headings, & fuel flows. In the case of the CH-53E helicopter, the mission data is saved to a Mission Data Loader (MDL or "Brick") and loaded into the aircraft. The brick simply stores the planned route waypoints for loading into the aircraft's on board Global Positioning System (GPS). The pilot selects the route to fly and the GPS provides updated heading, course, & timing information to navigate the planned route. There is no dynamic download or exchange of information in this process. Any significant changes that affect the mission are relayed via voice communications en route or discovered "on the fly" as the plan unfolds. This is the current state of Marine heavy, medium, and light attack helicopters.

B. GOAL

This paper proposes an Information Awareness Module (*I-AM*) architecture that addresses the innate need for shared battle space awareness among aviation entities in real to near real time. Though this architecture will be described from a helicopter vantage, it is not limited to this entity class. Rather, the intent has been to adopt an architectural framework that supports a product line approach capable of addressing this basic battle space need of all entities

(Air, Ground, Sea). This shared awareness is facilitated by the tailored exchange of information that by nature should be inherently valuable, relevant, and timely to any user or platform requiring it.

II. STRATEGIC CONCEPT

A. THE VISION BEHIND THE *I-AM* ARCHITECTURE

The vision behind this proposed architecture can be best understood through the following operational vignette:

The Joint Force Air Component Commander's (JFACC) Air Tasking Order (ATO) for the following day's air operations was released at 1800z. On board the amphibious assault ship Tarawa, pilots of Marine Heavy Helicopter Squadron (HMH) 465 (Reinforced) continued their mission planning for the following day's assault. HMH-465 was a composite squadron and was designated as the Aviation Combat Element (ACE) for the 15th Marine Expeditionary Unit (MEU). The squadron was comprised of a mix of CH-53X, AH-1Y, UH-1Z, MV-22, and Joint Strike Fighter (JSF) aircraft. Utilizing Information Awareness Module (I-AM) mission planning client terminals in the Ready Room, pilots were able to access a mission planning application that dynamically fused and interacted with the Joint Operation Area Information Grid (JIG). Upon entering the ATO assigned mission ID, their "slice" of the battle space was filtered and made available for planning. Routing options were displayed based upon the constraints & framework of the Air Tasking Order (ATO), the Air Space Control Order (ACO) & Special Instructions (SPINs). Threat observations, assessments, and expectations fed from the Enemy Air/Ground Order of Battle information were fused with the Commander's Intent (strategic through tactical), the Friendly Air/Ground/Sea Orders of Battle and Meteorological (METOC) information that generated optimum mission paths for aircrew selection. The pilots then entered the detailed mission specifics (number of aircraft, specific take off/landing times, fuel & ordnance loads, LZs, targets, objectives, etc.) and system calculated go-no-go criteria, optimum airspeeds, ordnance, fuels loads, divert options, and printable knee board mission "smart packs." The mission commander approved the plan, and it was simultaneously uploaded into the JIG and down linked (or manually disk loaded) into each of the squadron's aircraft in preparation for the following day's mission.

The aircrew manned up their aircraft at 0600. As the on board flight computers came on line, each aircraft's I-AM logged into the JIG. Immediately, updates from the last 24 hours of battle were received and the preplanned mission was dynamically updated & transformed into a current model for execution. As the aircraft lifted off and proceeded feet dry, on board sensors (GPS, Radar Warning Receivers), Navigational Instruments (airspeed, barometric altimeter, fuel flow/quantity, etc.), and the IFF command & control module (Identification Friend or Foe C2) began to publish the current state of each aircraft as they pressed on along their mission ingress routes. Intra-flight and inter-JIG communication was minimized by adhering to the rule of publishing information by exception. That is, there was no requirement for mission status updates as long as the flight proceeded within the plan tolerance "known" by all need to know JIG C2 entities. Occasional aircraft "heartbeats" published the aircraft state to the JIG in order to facilitate C2 and avert fratricide. These status heart beats were programmed to occur on a seemingly random, yet algorithmically controlled basis to counter enemy tracking & spoofing.

As the flight approached phase line red, the aircrew completed their penetration checklists. Door gunners test fired their weapons, and the aircraft assumed a terrain flight (TERF) profile at 50 feet to avoid enemy radar detection. Satellite ELINT sensors orbiting high over the joint operating area detected new enemy early warning & target tracking radars associated with a surface to air missile launcher in close proximity to the route's Initial Point (IP). Once detected, the information was published to the JIG where it was then routed to all entities that were either determined to be in critical need or were valid subscribers of this particular subset of information. Immediately, the cockpit information display alerted the pilots of critical new information that directly impacted the planned mission. The aircrew's attention was immediately drawn to the digital map display where the new threat was accurately plotted complete with threat rings. The copilot immediately selected the hazard avoidance overlay button and three optimum routes to

the LZ were displayed over the existing profile. Since L-Hour was firm, the Air Mission Commander selected the option that ensured the mission would meet its time on target (TOT) in addition to maximizing the fuel available for the AH-1Y escorts. Instantaneously, the JIG & all aircraft in the flight were updated with the new plan information. As the flight maneuvered along their new route, the Joint Strike Fighters escorts quickly neutralized the pop up threat. The rest of the mission proved to be uneventful….

This futuristic network centric operational vision was the primary impetus that inspired the architecture presented in this paper. It was further refined by adopting the *VIRT* - Valued Information at the Right Time - construct presented in class. One of the key tenants inherent to the VIRT construct, and the I-AM architecture, is the concept of efficient thought.[3] There are eight steps that comprise the efficient thinking decision loop. "Each [step] is supported by a world model that represents our best understanding of how things work."[4] In the I-AM architecture, the world model is equivalent to the Joint Operation Area model and consists of information across several domains such as Commander's Intent (Strategic, Operational, Tactical), Rules of Engagement (ROE), Air Space Control Order (ACO), Air Tasking Order (ATO), Special Instructions (SPINS), Enemy Order of Battle, Friendly Order of Battle, Operation Orders and Plans, Logistics models, Joint Prioritized Target List (JPTL), Master Air Attack Plan, threats, C^2, METOC data, imagery, Bomb Damage Assessments (BDA), and mission route planning to name a few. More than just a reservoir of information, the world model spans the battle space time continuum of past, present, & future. It maintains historical data and outcomes of past plans, tactics, & procedures. It models and predicts. In the current state, it fuses sensor & planning information

[3] Hyper-Beings: How Intelligent Organizations Attain Supremacy through Information Superiority, Part I, pre-publication DRAFT. Dr. Rick Hayes-Roth, Nov 2003, p. 46.

[4] Hyper Beings p. 46

and infers a forecast state from previous successes, & failures. Additionally, it produces candidate plans, or potential courses of action (COAs) in real time to counter unexpected outcomes or invalid planning assumptions. Finally, the model itself can be changed to more closely align the virtual world with the battle space reality.

The eight steps in the efficient thought decision loop are manifested in the I-Am architecture as follows: (1) Observe: The I-AM observes the environment by monitoring data received by an array of indigenous onboard sensors (Global Positioning Satellites (GPS), Inertial Navigation Systems (INS), Radar Warning gear (RAW) and various avionics components (airspeed, barometric altimeter, engine & flight instruments) as well as decoupled, distributed external sensors data from satellites, aircraft, and various ground based systems. This information is then used to update the JOA world model. (2) Assessment: The observed information is compared against the forecast plan model. (3) Changes: The I-AM determines the degree of changes to make to the model. (4) Generate Candidate Plans: Candidate COAs are generated and submitted to the pilot for acceptance (i.e. propose alternative routing to circumvent pop-up threat) (5) Project Likely Outcomes: The ramifications for selecting a COA are modeled and analyzed. For example, a candidate COA may avoid the threat, but the excess distances incurred will cause a delay in L-Hour at the current cruise speed of 120 kts and decrease the escort's time on station by 20 minutes due to fuel constraints. (6) Select Best Alternative Plan: The pilot or mission commander must choose to ignore the proposed COA or select the best fit for the

circumstances. (7) Communicate & Implement Chosen Plan: Once the pilot selects the candidate COA the new plan intention is transmitted to the JIG. (8) Validate & Improve the Model: The model is then updated with the new plan and the cycle begins anew.

III. THE I-AM ARCHITECTURE

A. FRAMEWORK

The framework of the I-AM architecture was constructed under the following assumptions:

1. A Joint Operation Area Information Grid (JIG) network exists and it is capable of efficiently networking all battlefield entities in real to near real time.

2. Battle space entities equipped with I-AM are in essence distributed systems that share a common, synchronized "world" model.

3. A communication technology & protocol exists that can efficiently route valuable, relevant information to the user that requires it, and quite often before he knows he needs it.

4. For this architecture, the pilot is considered the "planner."[5] Mission planning utilizes an I-AM planning client that is connected to JIG. The completed mission plan is uploaded to the JIG and distributed in advance to all Distributed C^2 entities in preparation for the mission.

B. COMPONENTS

1. PHYSICAL VIEW

Figure 1 depicts the I-AM aircraft client's architecture's physical view. It is redundant in nature to meet pilot and copilot desired views as well as provide an error cross check capability to compensate for system malfunctions or battlefield damage. Additionally, it incorporates a Redundant Array of Independent Disks (RAID) design that accommodates a large data storage capacity. Back up storage is also provided by a separate emergency hard drive. The I-Am client is

[5] It is conceivable that a mission could be planned by someone other than the assigned aircrew and "pushed" down through the JIG for execution.

furnished power through redundant generators and is equipped with an 8 hour battery back up capability. Additionally, a robust surge suppression and power fault capability is built in. Cooling for the system is provided by redundant modular cooling units located in the avionics bay. The JIG World Model & associated mission filtered model can be downloaded via disk, or via the JIG. The system also accepts manual pilot inputs.

Figure 1: I-AM Physical View

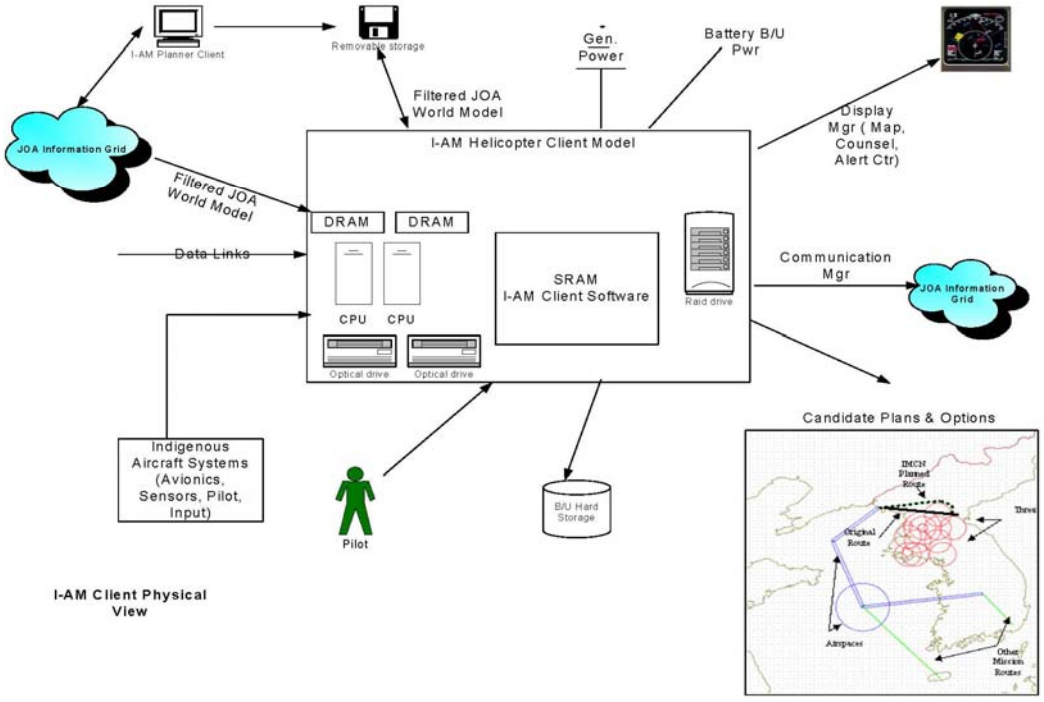

2. SYSTEM VIEW

Figure 2: I-AM System View

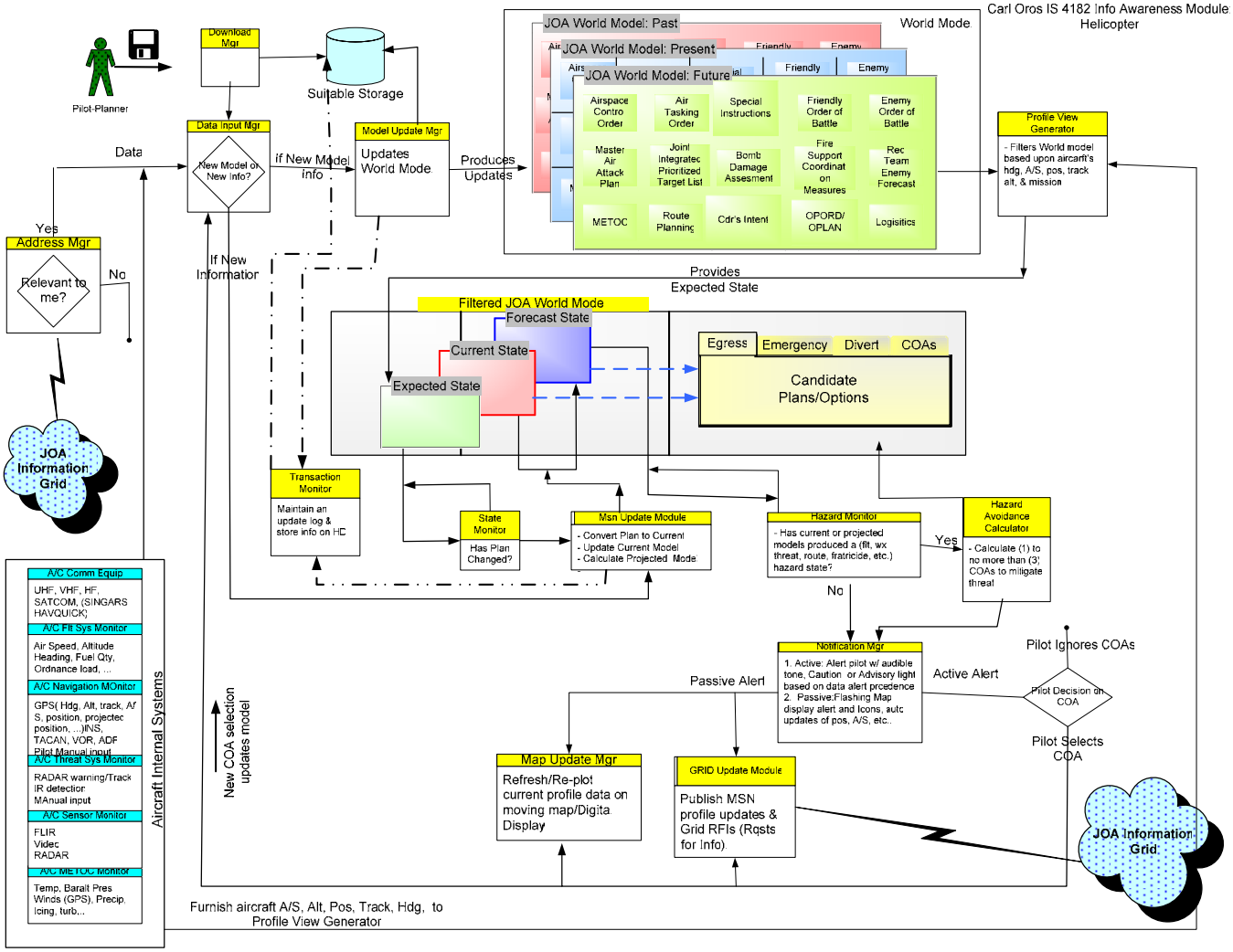

3. QUALITY ATTRIBUTES

Several quality attributes are applicable to the I-AM client system. They include synchronicity, currency, security, flexibility, redundancy, timeliness,

accuracy, and conciseness. This list is certainly not all inclusive. The three quality attributes addressed in this paper's architectural analysis are timeliness, accuracy, and conciseness. Timeliness of the architecture refers to the speed of which the system processes received information in order to provide the design response (notify pilots visually, generation of candidate plans, inform JIG). Accuracy pertains to the ability of the data, calculation output, & display to meet mission required tolerances. Conciseness refers to non-verbose nature of how information is input, displayed, and transmitted. Information flow is non verbose in nature and pushes information by exception only.

4. QUALITY REQUIREMENTS

The system is designed to receive external information from the JIG and internal information from onboard sensors & navigational equipment to (1) provide the pilot with a visual display of the information (cockpit digital map display, alert message center, counsel information display), (2) provide the pilot with candidate plans and options to counter unexpected threats & scenarios, and (3) transmit aircraft status & mission updates by exception to the JIG. Figure 3 depicts the priority requirements of the I-AM helicopter client.

The I-AM's critical core functional requirements that enable these outputs are:

1. Concurrent candidate plan generation & updating.
2. Continuous threat & hazard avoidance predictions calculated in real time from external & internal information.

3. Ability to dynamically filter in real time the views, processes, simulations, and predictions of the world model to address the current mission “slice”, or micro-model.

Figure 3: I-AM PRIORITY REQUIREMENTS

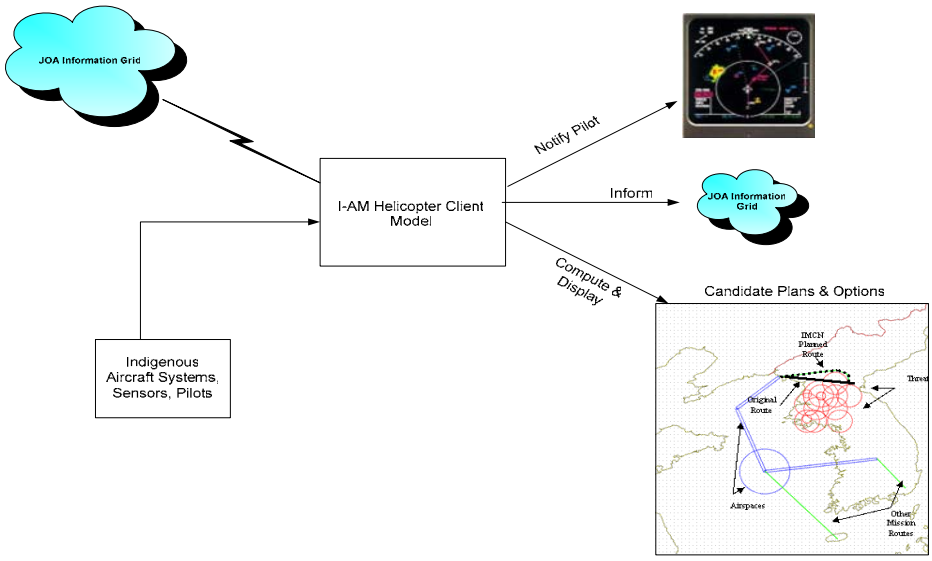

IV. ARCHITECTURE EVALUATION

A. WHY IT'S GOOD

The I-AM architecture is designed in essence to be "*holonic.*"[6] In this regard, it reflects the overarching architecture of the JIG and can be utilized as a product line applicable across multiple platforms and sensors. Variations in the design would be needed to accommodate specific platform attributes. Typical variants would have to accommodate platform velocity and timeliness requirements directly related to candidate plan calculations & generated model views. For example, the I-AM views and information processing requirements of a high performance jet aircraft vary immensely in comparison to a Light Armor Vehicle (LAV).

Three scenarios were used to "stimulate" and analyze the functionality of the architecture. The scenarios used were:

(1) Null: Helicopter strait & level, proceeding in accordance with the mission plan, updating normal GPS/NAV information.

(2) Abrupt, unexpected 90 degree turn

(3) Pop-Up threat information received that was not part of mission plan

The architecture responded well to all of these scenarios and met the basic requirements of pilot notification, candidate plan generation, and JIG publishing. The utility tree diagrams for these scenarios are listed below.

[6] Hyper-Beings: How Intelligent Organizations Attain Supremacy through Information Superiority, Part I, pre-publication DRAFT. Dr. Rick Hayes-Roth, Nov 2003, pp 5-6.

1. NULL SCENARIO UTILITY TREE

Figure 4: NULL Utility Tree

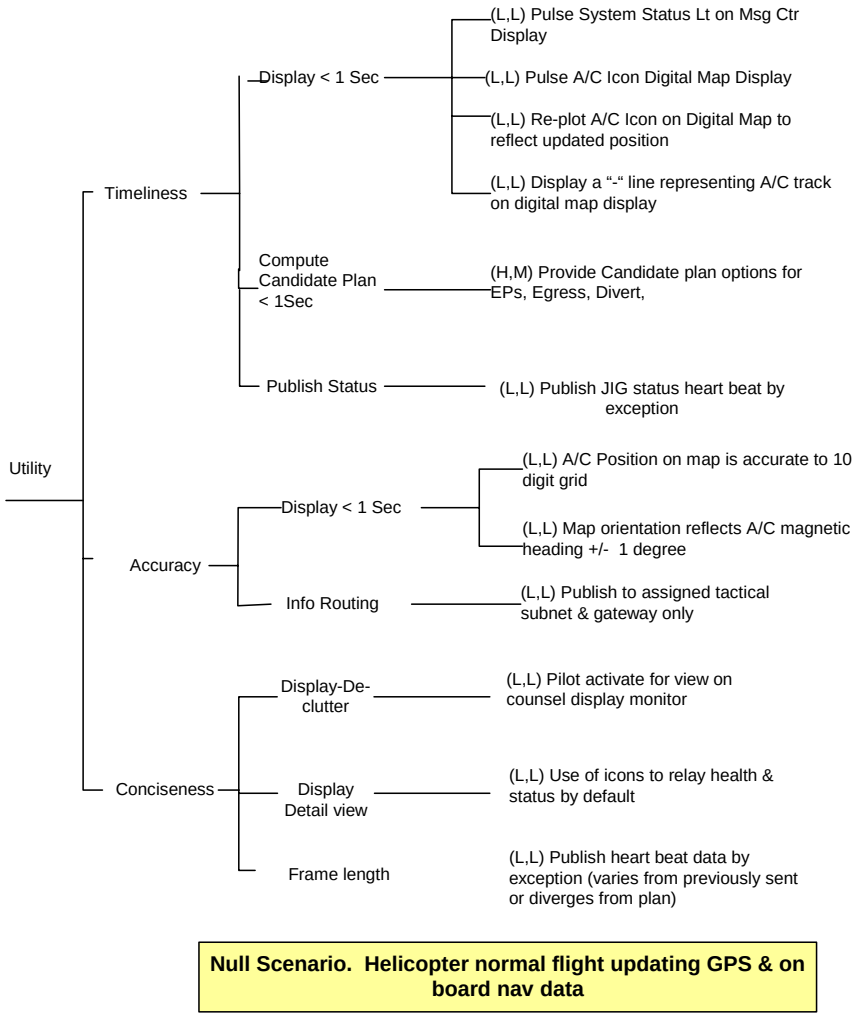

Null Scenario. Helicopter normal flight updating GPS & on board nav data

2. ABRUPT 90 DEGREE TURN SCENARIO UTILITY TREE

Figure 5: 90 Degree Turn Utility Tree

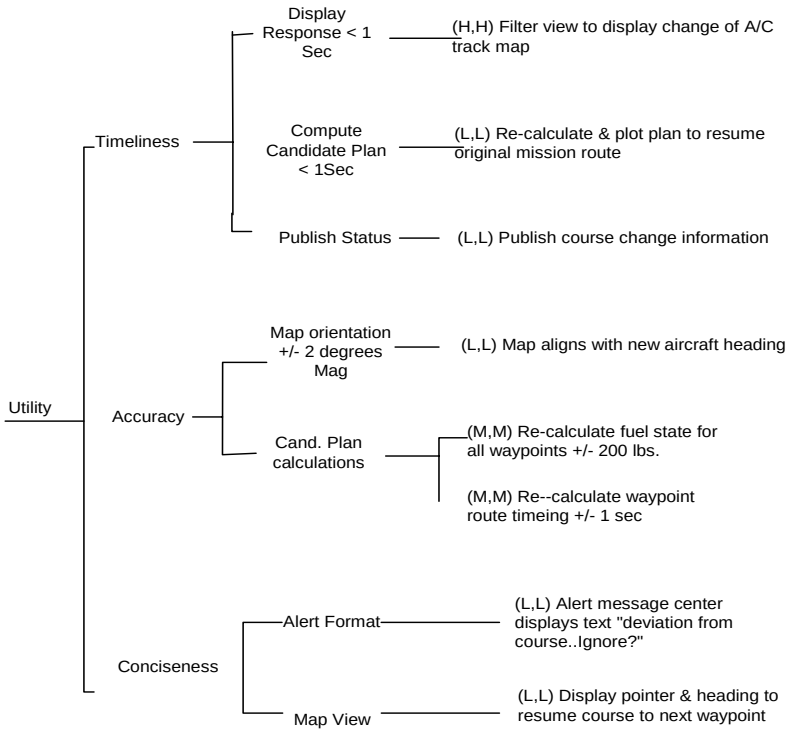

Scenario #2: Sudden 90 Degree turn

3. POP-UP THREAT INFORMATION RECEIVED FROM JIG

Figure 6: Pop Up Threat Utility Tree

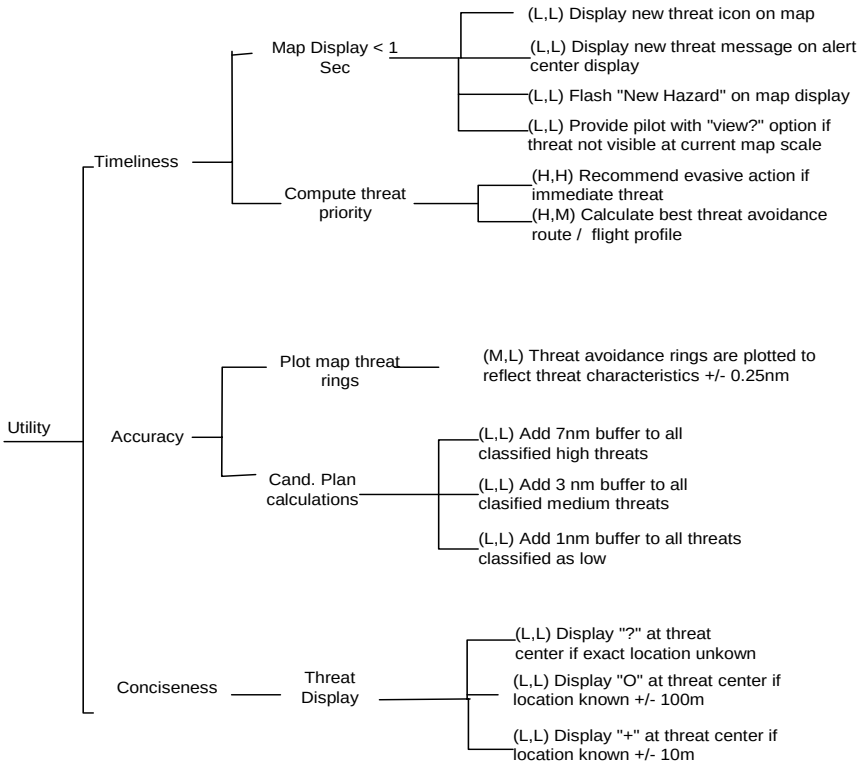

Scenario #3: Pop-Up Threat Data Received

B. VULNERABILITIES

The scenarios identified three notable vulnerabilities of the I-AM architecture.

a. Ability to discern and correct from corrupt data input.

b. Timeliness of threat avoidance candidate plan generation & the need to perhaps perform continuous parallel threat & hazard forecasts (at minimum for Divert, egress, resume course, emergency procedures). This would be necessary to mitigate latency in providing the pilot with time critical evasive action / hazard avoidance recommendations.

c. Timeliness of profile view generation

C. SENSITIVITIES

The following sensitivities were discovered as a result of the scenarios:

1. Latency in generating the filtered model view directly impacts the ability to generate the filtered JOA world model current & forecast states, and candidate plan generation.
2. Latency associated with the filtered view generator could impact hazard & threat avoidance calculations, recommended actions, & notification.
3. Update module could conceivably corrupt the world models with inaccurate or malicious input data causing invalid states and predictions.

D. TRADE-OFF POINTS

The filtered model's perspective and accuracy will very with the depth of view used by the view generator. The potentially large battle space reflected in the filtered model may preclude accurate, timely forecasts and candidate plan generation. This could be off set by creating a filtered subset where slices in the near term are held to more stringent predictive calculations than slices at the distant 4-D space boundary. Therefore, prediction probabilities increase with time as the aircraft nears the next "slice" and more detailed level data is received for calculations. Thus the system is not bogged down with attempting to calculate every possible contingency for a large swath of filtered battle space. Fig. 7 depicts a hypothetical view of the filtered battle space with respect to time for model calculations.

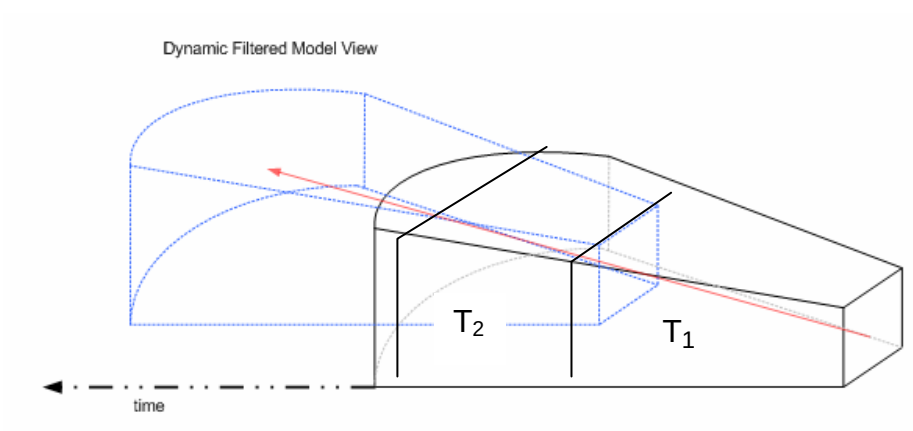

Figure 7: Filtered Battle Space vs. Time

E. RISK MANAGEMENT STRATEGY

The analysis of the architecture provided insight into several potential risk mitigation options.

1. Redundant system functionality for robustness:

The I-AM client should be designed for climate extremes, to include sandy & dusty conditions. The system is composed of dual CPUs, RAID, backup storage, and is equipped with battery back up & power surge capability.

2. Visual system status indication redundancy:

The architecture should utilize redundant visual options to validate system status to the pilot. This can be done through use of subtly flashing icons on the digital map, backed up by a pulsing light on the alert message center, and further announced via a short text message “ok”, for example.

3. Parallel hazard forecast & candidate plan generation

The architecture should calculate candidate options (egress, divert, EP, etc) in parallel with the current to forecast state model generation vice performing the calculation when a hazard or threat condition is detected. This will improve response timeliness in scenarios where threat avoidance or mitigation is time critical.

4. Threat Modeling & Prediction

Candidate plans for hazard & threat avoidance should be continuously updated & modeled to increase timely & accurate predictive models of enemy actions based on the aircraft’s projected 4-D mission slice

5. Wide filtered model view

The filtered system view should strike a balance between being large enough to foresee & calculate future threat actions without sampling so large of a battle space that it incurs an unacceptable latency in pilot notification & threat avoidance actions. (See figure 7)

6. Input message format filtering

The architecture should implement an input filter that is capable of restricting input data to the proper format in order to mitigate the potential corruption of model data.

7. Need for alert notification precedence

There exists a potential to overwhelm aircrew with numerous hazard & threat alerts. The architecture requires a threat and hazard precedence classification be created to prioritize & filter these alerts. Potential notification classes are: Flash (potential for loss of life), immediate (impacts mission goals or Cdr's intent), priority, routine, etc.

8. Data input error cross checking

The system should have the ability to cross check primary GPS heading & track data with secondary navigational instrument data fir 1st order determination of data accuracy & to ensure proper format (i.e. filter for corrupt data).

VI. APPENDIX A: SCENARIO BASED ARCHITECTURE FLOWS

A. NULL SCENARIO ARCHITECTURE FLOW:

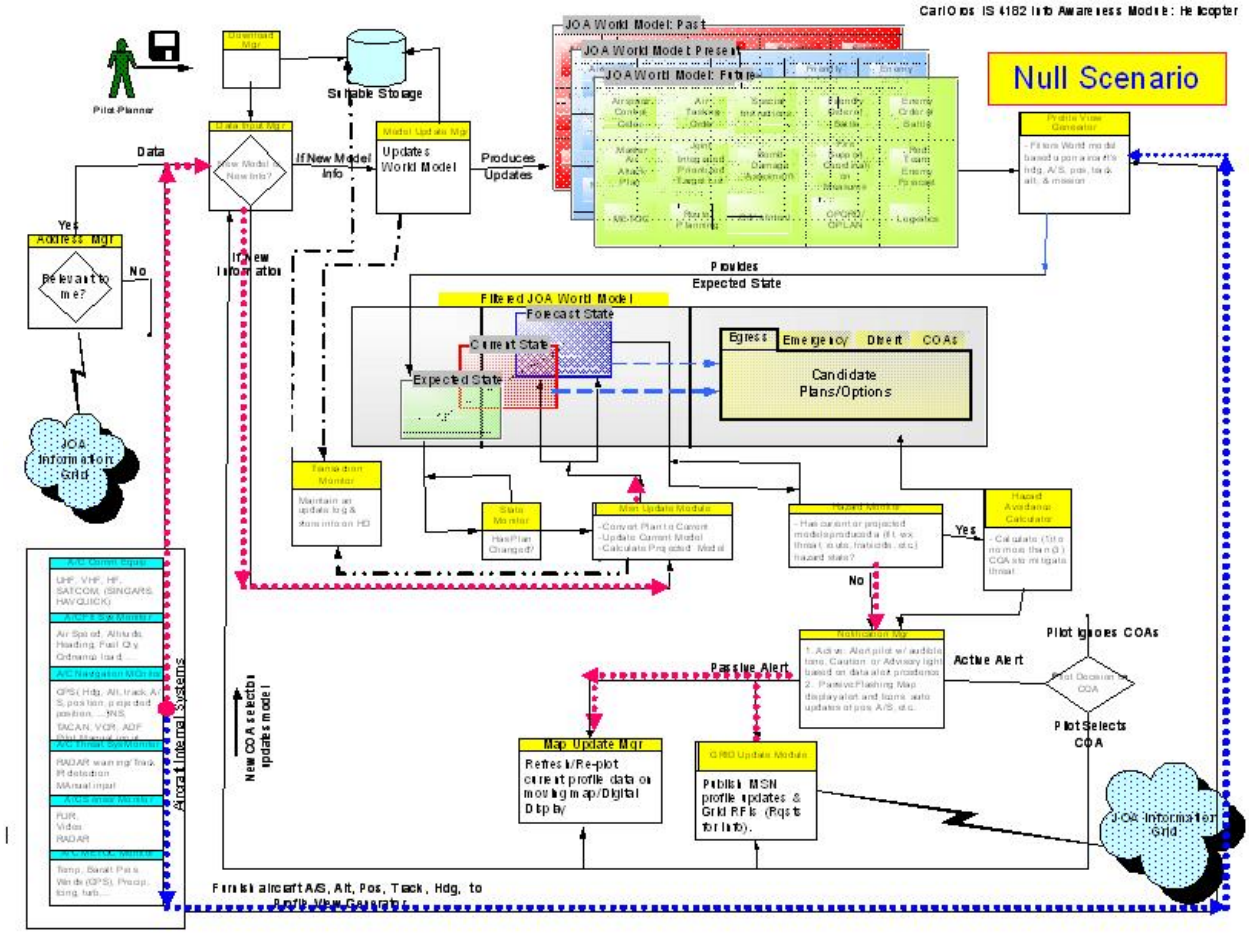

B. 90 ^{0} SCENARIO ARCHITECTURE FLOW:

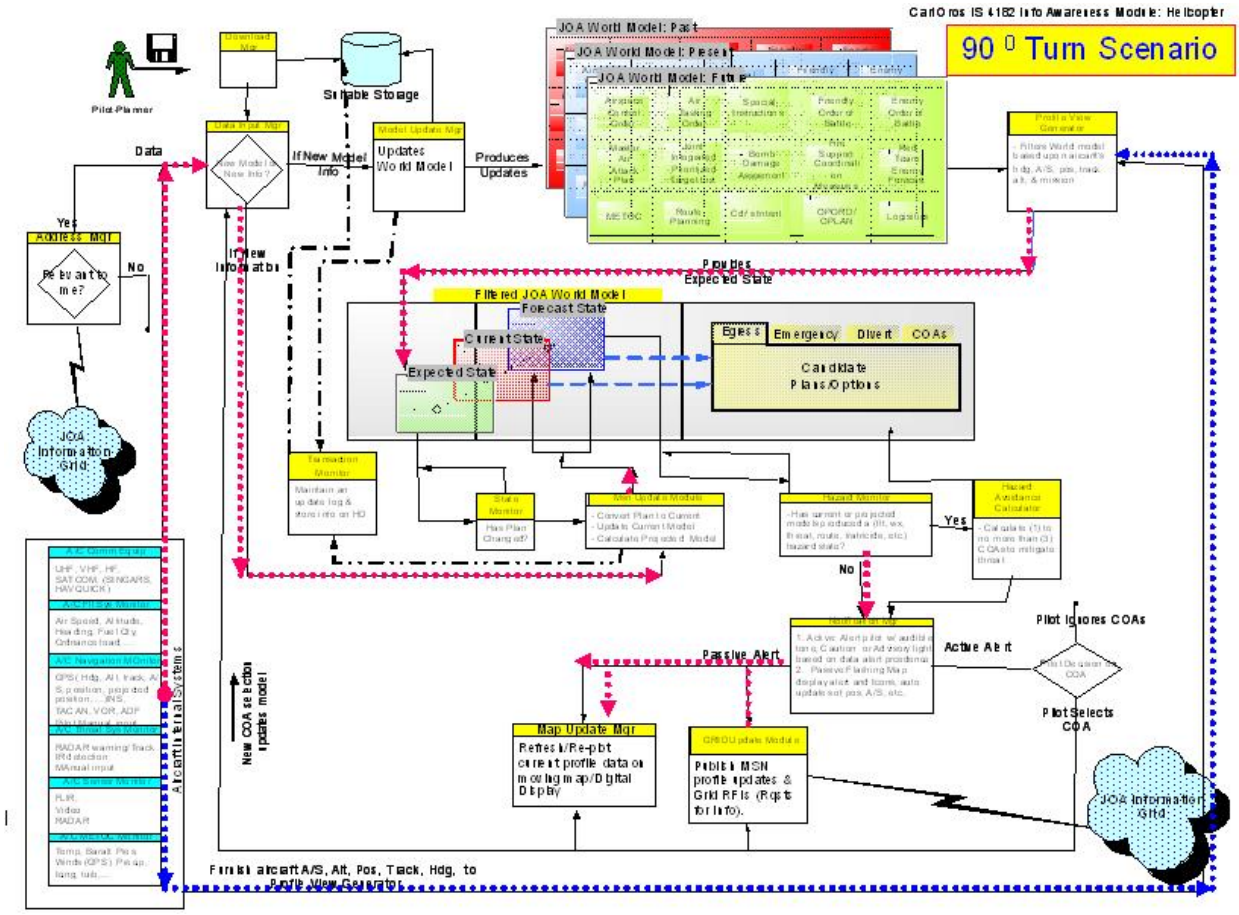

C. POP-UP THREAT SCENARIO ARCHITECTURE FLOW: